Parts Catalog



SP08

Mixer

Model: SP08

02/25/25 Rev N
IMPORTANT!
TO EXPEDITE SHIPMENT OF PARTS, ALWAYS SPECIFY MODEL, REV,
PART NUMBER, AND SERIAL NUMBER OF UNIT.

GLOBE FOOD EQUIPMENT COMPANY

2215 East River Road
Dayton, Ohio 45439

Parts Department
Toll Free 1-800-745-6238
E-Mail: info@globefoodequip.com
Website: www.globefoodequip.com

Not for resale

© Globe Food Equipment Company, 2025

Table of Contents

Description	Page
SP08 Base Components	4
SP08 Head Components	6
SP08 Gearbox Components	8
SP08 Planetary Components	10
SP08 Wiring Diagram	12

SP08 Base Components

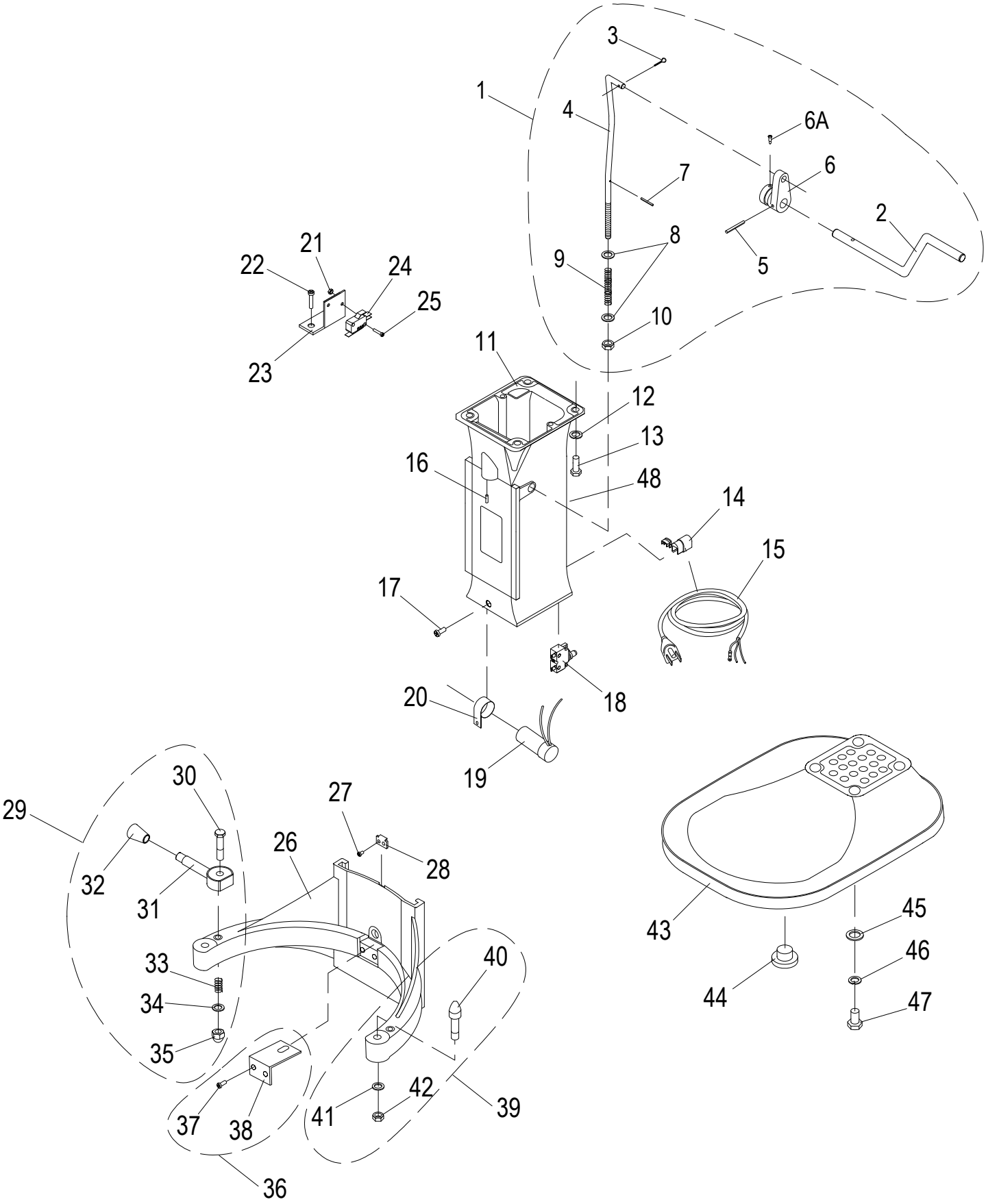

© Globe Food Equipment Company

SP08 Base Components

Item	Part Number	Description	Qty	Serial Number
1	X08065-74	Bowl Lift Kit	1	
2		Handle, Bowl Lift	1	
3	X08066	Cotter Pin	1	
4		Rod, Bowl Lift	1	
5		Roll Pin Ø5x24mm	1	
6A	X08069A	Shoulder Screw	1	
6		Connector, Bowl Lift	1	
7	X08070	Roll Pin Ø3x18mm	1	
8	X08071	Washer M8x16x1.5mm Flat	2	
9	X08072	Spring M5	1	
10	X08074	Nut M8 Hex	1	
11	X08075	Column	1	
12	X08101	Washer M8x16mm Flat	4	
13	X30075	Ext. Hex Hd Screw M8-1.25x20mm, Zn	4	
14	X08078	Strain Relief	1	
15	X08079	Power Cord	1	
16	X08080	Set Screw M5x20mm Socket Hd - Cup Point	1	
17	X08081	Screw M5x21mm Pan Hd	1	
18	X08082	Reset Switch	1	
19	X08083	Capacitor	1	
20	X08084	Clamp	1	
21	X08155	Nut M3 Hex	4	
22	X08156	Screw	1	
23	X08157	Microswitch Bracket	1	
24	X08158-159	Microswitch Kit	1	
25	X08156	Screw	2	
26	X08086	Bowl Cradle	1	
27	X08087	Screw M4x4mm Pan Hd	2	
28	X08088	Clip	1	
29	X08089-93	Bowl Clamp Kit (2/Set)	1	
30	X08085	Screw M5x45mm Hex Hd	2	
31		Bowl Clamp	2	
32	X08090	Knob	2	
33		Spring	2	
34	X10034	Washer M10 Flat	2	
35	H00341	Nut	2	
36	X08094-95	Bracket Kit	1	
37	H00546	M5x10mm Button Hd Screw	2	
38		Bracket, Bowl Lift	1	
39	X08096-98	Lock Pin Kit	1	
40		Pin, Bowl Lock	2	
41	H00536	M8 Internal Tooth Lock Washer	2	
42		Nut M8 Stop	2	
43	X08099	Base	1	
44	X08100	Foot Kit (4/Set)	1	
45	X08101	Washer M8x16mm Flat	4	
46	X08102	Lock Washer M8 ID-8.5, OD-14.8, TH-2mm Zn	4	
47	X08103	Screw M8 x 16mm Hex Hd	4	
48	X91014	Hazardous Voltage Label	1	

© Globe Food Equipment Company

SP08 Head Components

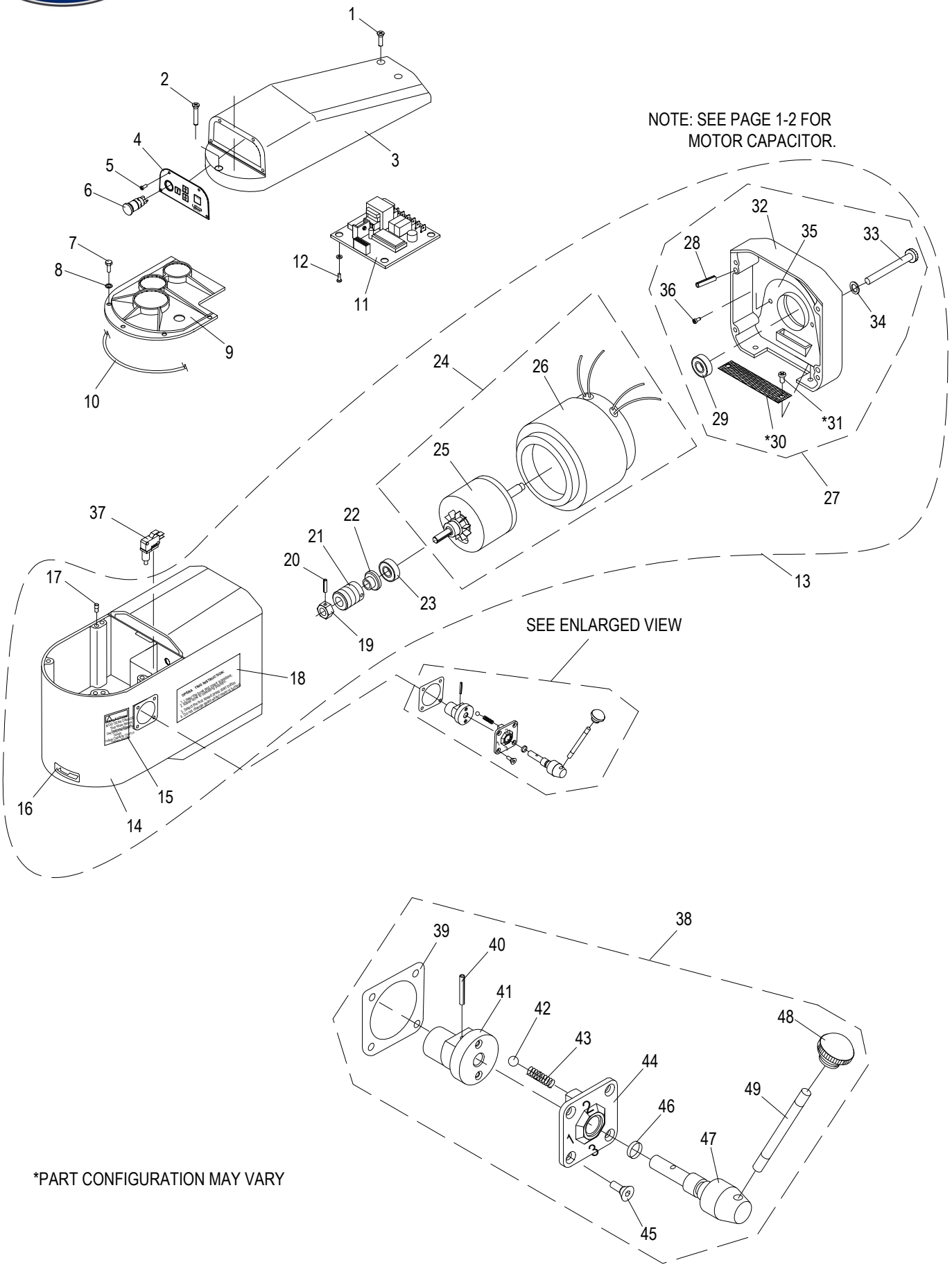

© Globe Food Equipment Company

SP08 Head Components

Item	Part Number	Description	Qty	Serial Number
1	X08001	Screw M5x20mm Flat Head	2	
2	X08002	Screw M4x30mm Flat Head	1	
3	X08003	Top Cover	1	
4	X08004	Digital Control Panel	1	
5	X08005	Screw M3x6mm Round Head	4	
6	X08006	Emergency Stop Button	1	
7	H00197	Hex Hd Screw M6x15 - Zn	4	
8	X08008	Washer, Spring M6, ID-6MM, OD-10MM, THICK-1.5MM	4	
9	X08148	Gear Cover	1	
10	X08148-1	Gasket	1	
11	X08160	Control Board w/Display	1	
11	X08160-1	Digital Display	1	
12	X08161-162	Screw M3x10mm Round Head & Washer - SS	4	
13	X01760	Transmission Case & Motor (120V/60HZ/1PH/4A)	1	
14		Tranmission Case	1	
15	X91010	Gear Damage Label	1	
16	X91012	Arrow Label	1	
17	X08009	Locator Pin	2	
18	X91007	Injury Warning Label	1	
19	X08051	Nut M10 Hex	4	
20	X08052	Roll Pin Ø3x10mm	1	
21	X08053	Worm Gear 60Hz	1	
22	X08054	Oil Seal	1	
23	X08055	Bearing (6202LU)	1	
24	X01760	Transmission Case & Motor (120V/60HZ/1PH/4A)	1	
24		Motor Assembly	1	
25		Motor Shaft And Core	1	
26		Motor Coil	1	
27	X08058-64	Rear Cover Kit	1	
28		Roll Pin Ø6x12mm	1	
29	X08055	Bearing (6202LU)	1	
30		Screen, Motor Cooling Part Configuration May Vary	1	
31	X25060	Screw M4x6mm Pan Hd Part Configuration May Vary	2	
32		Cover, Rear Motor	1	
33	X08063	Screw M5x50mm Hex Head & Washer	4	
34	X20207	Lock Washer M5, ID-5.4, OD-8.8, TH-2mm, SS-18	4	
35		Shroud	1	
36		Roll Pin Ø3x18mm	3	
37	X30051	Microswitch, Bowl Lift	1	
38	X08040-50	Gear Shift Kit	1	
39	X08040	Gasket	1	
40		Roll Pin Ø3x18mm	1	
41		Shaft Bias	1	
42		Roller	2	
43		Spring	2	
44		Plate, Gear Arm	1	
45	X10042	Flat Hd Screw-Phillips M4-0.7x10mm, Zn	4	
46		O-Ring	1	
47		Shaft, Gear Arm	1	
48	X08046	Knob	1	
49		Gear Arm	1	

© Globe Food Equipment Company

SP08 Gearbox Components

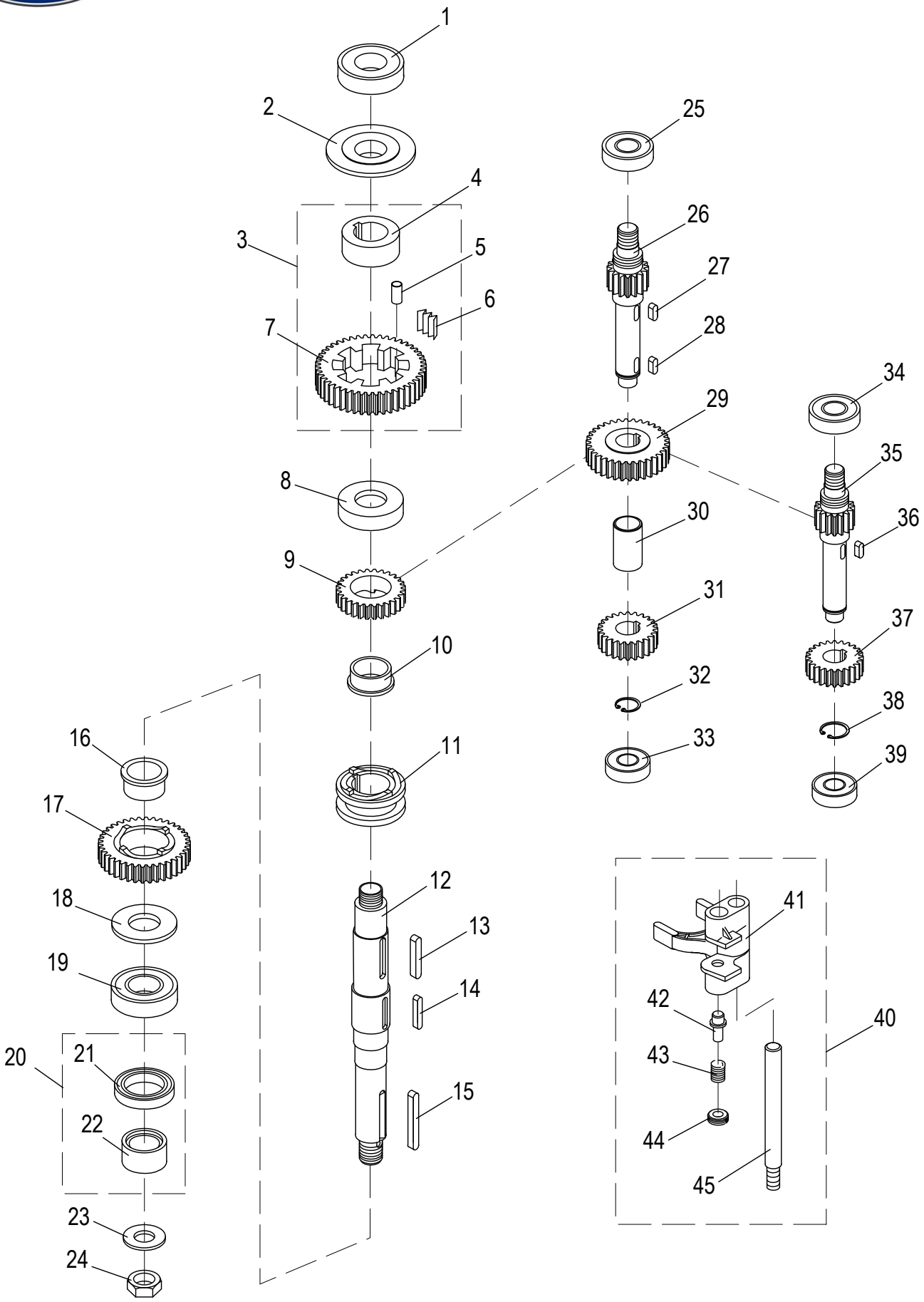

© Globe Food Equipment Company

SP08 Gearbox Components

Item	Part Number	Description	Qty	Serial Number
1	X08104	Bearing (6202Z)	1	
2		Lead-In Oil Pad	1	
3	X08106-107	1st Speed Gear Assembly (42T)	1	
4		Bushing	1	
5		Roller Pin	1	
6		Spring, Slice	1	
7		Gear, First Speed (42T)	1	
8	X08108	Bushing	1	
9	X08109	Clutch Gear (25T)	1	
10	X08110	Bushing	1	
11	X08123	Clutch Sleeve	1	
12	X08124	Drive Shaft	1	
13	X20123	Key, Round Ends H-5xW-5xL-18mm	1	
14	X08126	Key 4x4x28mm	1	
15	X08127	Key 5x5x26mm	1	
16	X08111	Bushing	1	
17	X08112	Second Speed Gear (34T)	1	
18	X08113	Bearing Pad	1	
19	X08114	Bearing (6203LU)	1	
20	X08116-1	Bushing & Seal Kit Replaces O-Ring Config.	1	
21		Oil Seal	1	
22		Oil Bushing	1	
23	X08119	Washer M8x22x1mm Flat - SS	1	
24	X08120	Nut M8 Hex - Nylon Insert	1	
25	X08128	Bearing (6200Z)	1	
26	X08129	Transmission Shaft (19T)	1	
27	X08130	Key 5x5x12mm	1	
28	X25143	Key 5x5x10mm	1	
29	X08132	Third Speed Gear (36T)	1	
30	X08133	Bronze Bushing	1	
31	X08134	3rd Speed Gear (27T)	1	
32	X5C40	Retaining Ring	1	
33	X08128	Bearing (6200Z)	1	
34	X08128	Bearing (6200Z)	1	
35	X08143	Master Shaft (18T)	1	
36	X08130	Key 5x5x12mm	1	
37	X08145	Bronze Gear (20T)	1	
38	X5C40	Retaining Ring	1	
39	X08128	Bearing (6200Z)	1	
40	X08137-141	Shifter Yoke Kit	1	
41		Shifter Yoke	1	
42		Shifter Yoke Plunger	2	
43		Shifter Yoke Spring	2	
44		Nut M3	2	
45		Shifter Guide Rod	1	

© Globe Food Equipment Company

SP08 Planetary Components

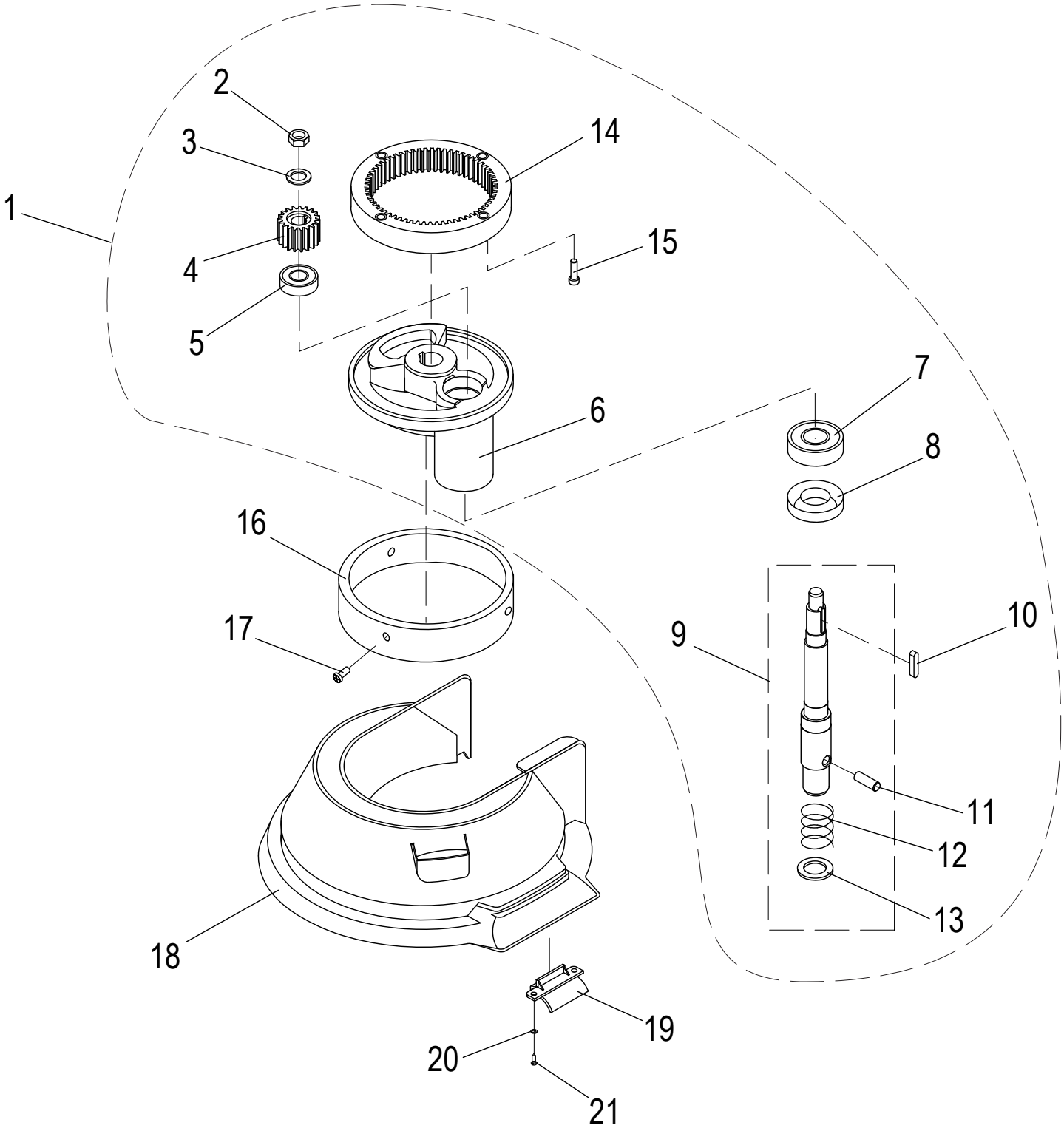

© Globe Food Equipment Company

SP08 Planetary Components

Item	Part Number	Description	Qty	Serial Number
1	X01873	Planetary Assembly	1	
2	X08015	Nut M6 Hex - Nylon Insert	1	
3	X08016	Flat Washer ID 6.5 OD 17.75 TH 1.5 mm SS	1	
4	X08017	Pinion Gear (17T)	1	
5	X08018	Bearing (6001LU)	1	
6	X08020	Planetary Holder	1	
7	X08022	Bearing (6005Z)	1	
8	X08023	Oil Seal 32X17X7mm	1	
9	X08024	Planetary Shaft Assembly	1	
10	X08036	Key 4x8x8mm	1	
11	X08037	Dowel Pin	1	
12	X08038	Spring	1	
13	X08039	Washer 13.1x1mm Flat	1	
14	X08019	Planetary Gear (56T)	1	
15	X08034	Cap Screw M6x13mm Socket Hd	4	
16	X08021	Planetary Holder Cover	1	
17	X08035	Screw M2.6x4mm Binder Hd	3	
18	X08154-2	Splash Cover	1	
19	X08149	Clip & Support Kit	2	
20	X08150	Washer M4 Flat	4	
21	X08151	Screw M4x8mm Self Tapping Truss Hd - Clip Mtg	4	

© Globe Food Equipment Company

SP08 Wiring Diagram

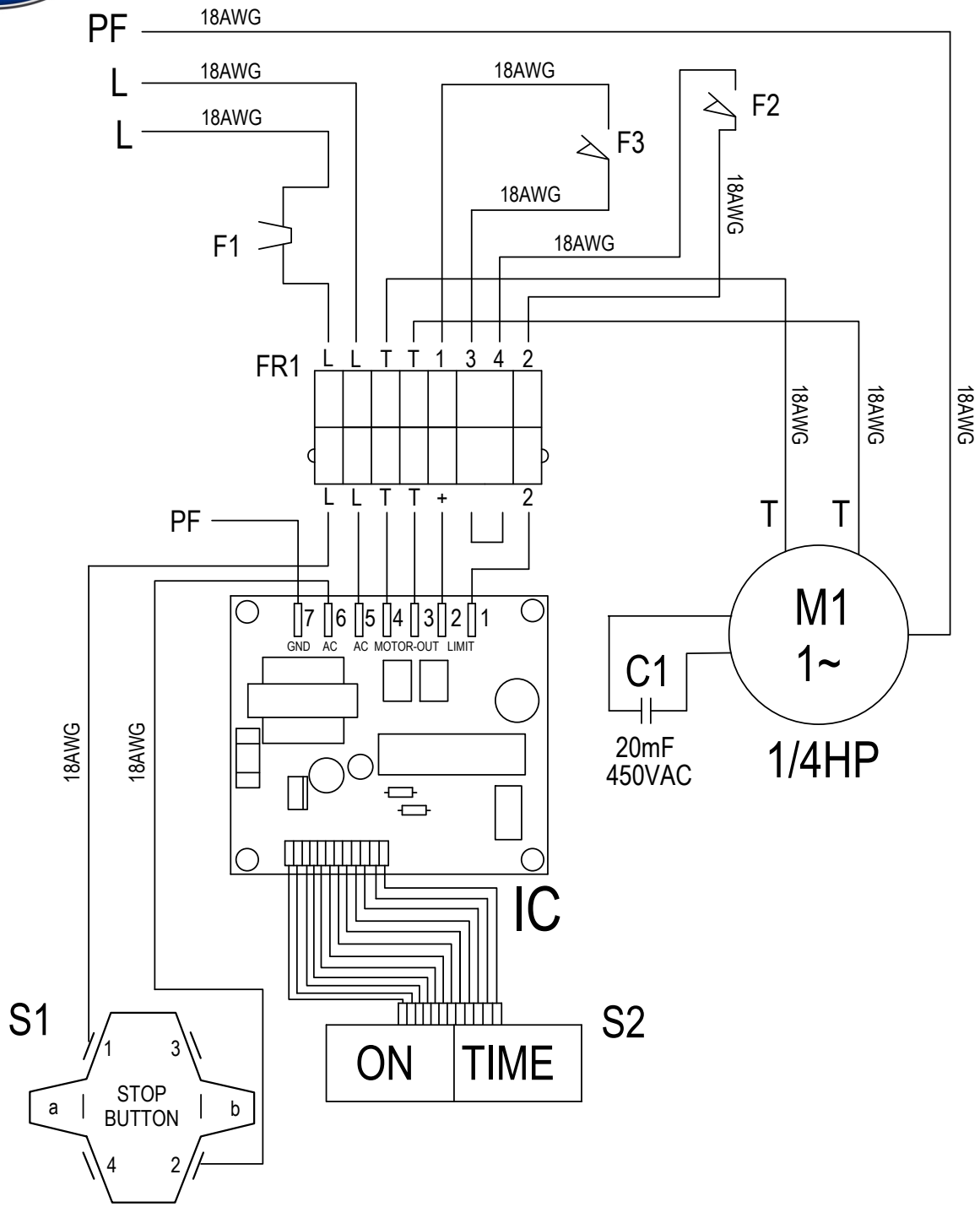

Item	Description	Qty
C1	Capacitor	1
F1	Overload Protection	1
F2	Microswitch (Safety Guard)	1
F3	Microswitch (Bowl Lift)	1
FR1	Terminal Block	1
IC	Ic Board	1
S1	Emergency Stop Button	1
S2	Start Button, Timer LC Control	1
M1	Motor, 1/4HP, 1PH, 120V/220V, 50/60HZ	1

© Globe Food Equipment Company